EQUIP. TYPE ~~R-390A/URR~~ EXP. NO.

~~COL. 540 7466 002~~

NOTICE: WHEN GOVERNMENT DRAWINGS, SPECIFICATIONS, OR OTHER DATA ARE USED FOR ANY PURPOSE OTHER THAN IN CONNECTION WITH A DEFINITELY RELATED GOVERNMENT PROCUREMENT OPERATION, THE UNITED STATES GOVERNMENT THEREBY INCURS NO RESPONSIBILITY NOR ANY OBLIGATION WHATSOEVER; AND THE FACT THAT THE GOVERNMENT MAY HAVE FORMULATED, FURNISHED, OR IN ANY WAY SUPPLIED THE SAID DRAWINGS, SPECIFICATIONS, OR OTHER DATA IS NOT TO BE REGARDED BY IMPLICATION OR OTHERWISE AS IN ANY MANNER LICENSING THE HOLDER OR ANY OTHER PERSON OR CORPORATION, OR CONVEYING ANY RIGHTS OR PERMISSION TO MANUFACTURE, USE, OR SELL ANY PATENTED INVENTION THAT MAY IN ANY WAY BE RELATED THERETO.

THIS DOCUMENT HAS BEEN PURCHASED BY THE GOVERNMENT AND MAY BE REPRODUCED AND USED IN CONNECTION WITH ANY GOVERNMENT PROCUREMENT OR MAINTENANCE OPERATION.

*FOR INFORMATION ONLY. CONTRACTOR MAY AT HIS OPTION DEVIATE FROM THESE PROCESS DETAILS.

~~*SWE APPROVAL~~
~~SYM PR10042-2~~

REVISIONS

SYM	DESCRIPTION	DATE	APPROVAL
A_1	A_1 - COMP 301 WAS 302	1 OCT. 59	42428-PC-59-A1-51 REV'D. PME

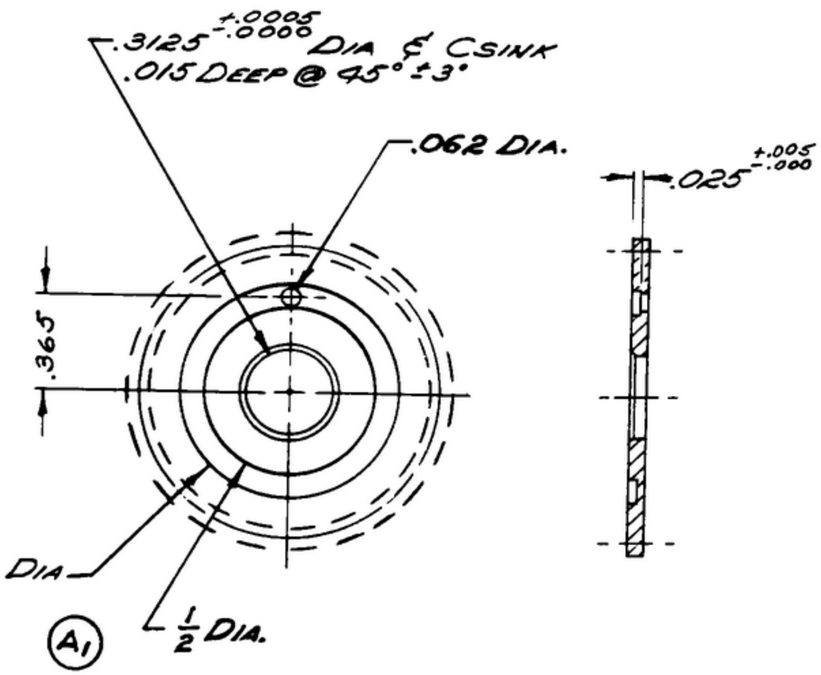

NOTES:

1. GEAR DATA.
   - NORMAL DIAMETRAL PITCH 32
   - NORMAL PRESSURE ANGLE 20°
   - NUMBER OF TEETH 36
   - THEORETICAL PITCH DIAMETER 1.125

   BACKLASH .002 TO .003 WHEN REFERRED TO THE THEORETICAL PITCH CIRCLE
   TOTAL COMPOSITE ERROR NOT TO EXCEED .003 WHEN MEASURED WITH MASTER GEAR
   AMERICAN STANDARD INVOLUTE TOOTH FORM
   ALL TERMS USED AS DEFINED BY A.G.M.A. STDS.

CRES, COMP 301, COND 1/2 HARD, PER SPEC MIL-S-5059,

FINISH: E300 PER SPEC MIL-F-14072
~~* COLLINS 580 0025 00~~

~~COLLINS PART NO.~~	~~ITEM~~	~~REQD~~	~~PART NO.~~	~~DESCRIPTION~~	~~MATL~~	~~MATL SPEC~~

LIST OF MATERIAL ~~COLLINS PART NO. 558 0254 002~~

~~COLLINS NO.~~	~~QTY~~	NEXT ASSY	USED ON
~~558 0292 002~~	~~1~~	SM-B-248943	SC-DL-248775

APPLICATION

DRAWN HENRY | CHECKED RLm | APPROVED

UNLESS OTHERWISE SPECIFIED:
- DECIMAL DIMENSIONS INCLUDING HOLE SIZES MAY VARY ±.005
- FRACTIONAL DIMENSIONS INCLUDING HOLE SIZES MAY VARY ±1/64
- MACHINED ANGLES MAY VARY ±.1°
- SHEARED ANGLES MAY VARY ±.25°
- BROKEN ANGLES MAY VARY ±1.°
- ECCENTRICITY BETWEEN ANY DIAMETERS ON THE SAME CENTERLINE SHALL NOT EXCEED .010 TOTAL INDICATOR READING.
- ALL DIMENSIONS ARE FINISH DIMENSIONS INCLUDING APPLIED FINISH AND ARE GIVEN IN INCHES.

~~COLLINS RADIO CO.~~
~~CEDAR RAPIDS, IOWA~~
14214 - PH
51 - 93

SIGNAL CORPS
REVIEWED PME
APPROVED HLY PME
DATE 6 DEC 55

GEAR - SPUR

SCALE 2/1

DEPARTMENT OF THE ARMY
SIGNAL CORPS ENGINEERING LABORATORIES
FORT MONMOUTH NEW JERSEY

SM-B-248905

PD-794—074-3071-10—A4705—[illegible]

WHEN REFERRING TO THIS DRAWING STATE DRAWING NO., APPLICABLE ISSUE SYMBOL, IF ANY, AND DATE